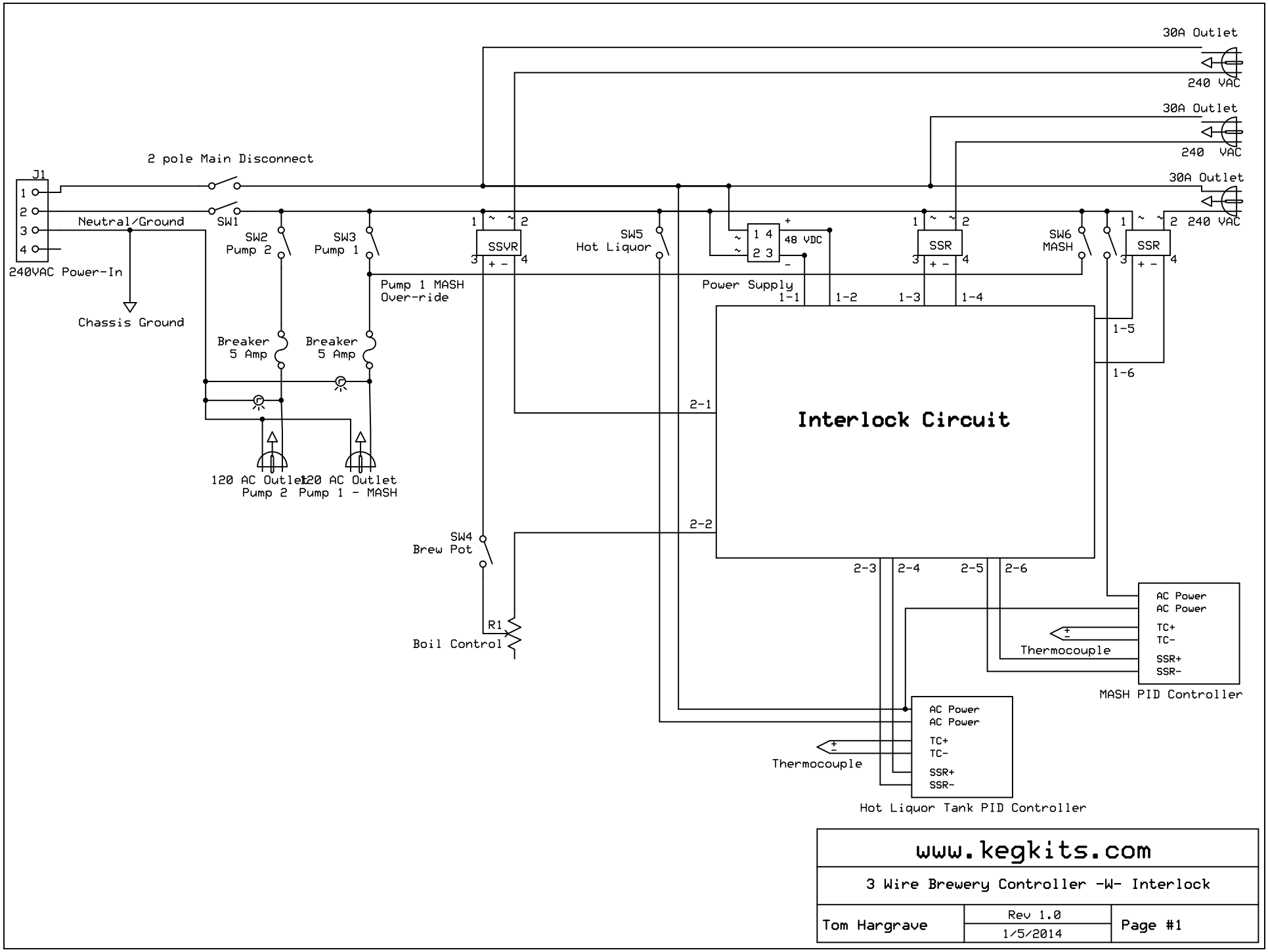

C:\Users\Thomas\Documents\Business\Drawings\Brewery Wire Control Panel With Interlock.sch - Sheet1